ITEM #

MODEL #

NAME #

SIS #

AIA #

Food Processor Stainless Steel Cutter Mixer - 17.5 LT - Variable Speed with Microtoothed Blade, Bowl and Scraper



600094 (DKE180S) Cutter mixer 17,5 lt capacity, timer, variable speed 300-3000 rpm. Supplied with microtoothed 3-blade rotor and stainless steel bowl

Short Form Specification

Item No.

Cutter mixer for mixing, chopping, mincing and liquidising. 17,5 litre capacity 304 AISI stainless steel bowl and base hinged transparent BPA free cover with a watertight seal. Lid central opening allows products to be added during the preparation.
Angled perforated micro toothed blades and scraper ensure consistent mixing.
Parts in contact with food are removable and dismountable for efficient cleaning.
Safety granted by magnetic micro switch which stops the machine if lid or bowl are not correctly positioned.
A safety device stops the machine restarting after a power cut, until the operator presses the start button. Touch button control panel, IP65 protection with low voltage level. Model equipped with micro toothed blade, bowl and scraper. Variable speed rotation: 300 to 3000 rpm.

APPROVAL:

Main Features

- Productivity suitable for 100-300 meals per service, up to 8 kg per cycle.
- Food processor allows fast liquidizing, mixing, mincing, chopping and pastry-making.
- Delivered with: - 17.5 liter stainless steel bowl with max liquid level indication to avoid spillage - micro toothed perforated blade - scraper
- Angled perforated knives and conical base of the bowl ensure consistent mixing.
- Lid with central opening to add ingredients in mid-cycle.
- Base fixed cover for a better handling.
- Cover metal frame to ensure seal water tightness to avoid leakage.
- All parts in contact with food are removable without tools and completely dismountable.

Construction

- 304 AISI stainless steel bowl with leak resistant spout and handles, easy to manage.
- Scraper with SS handle, easy to dismount.
- Variable speed from 300 to 3000 rpm.
- Power: 3000 watts.
- IP65 touch button control panel.
- Cover handle with double safety locking system.
- Transparent BPA free cover incorporates a magnetic safety system which stops the machine if lid is not properly closed.
- A safety device requires to press the start button to restart the machine after a power cut.
- Asynchronous silent industrial motor for heavy duty and longer life.

Included Accessories

- 1 of Scraper for K180S and KE180S cutter mixers — PNC 650046
- 1 of Microtoothed blade rotor for 17,5 lt cutter mixer — PNC 650047
- 1 of Stainless steel bowl for 17,5 lt cutter mixer — PNC 650074

Optional Accessories

- Scraper for K180S and KE180S cutter mixers — PNC 650046 ❑
- Microtoothed blade rotor for 17,5 lt cutter mixer — PNC 650047 ❑
- Stainless steel bowl for 17,5 lt cutter mixer — PNC 650074 ❑
- Stainless steel mobile stand. Height: 730 mm — PNC 653017 ❑
- Smooth blade rotor for 17,5 lt cutter mixer — PNC 653119 ❑
- Serrated blade rotor for 17,5 lt cutter mixer — PNC 653120 ❑
- Serrated blade rotor for meat for 17,5 lt cutter mixer — PNC 653539 ❑

Food Processor Stainless Steel Cutter Mixer - 17.5 LT - Variable Speed with Microtoothed Blade, Bowl and Scraper

Food Processor
Stainless Steel Cutter Mixer - 17.5 LT - Variable Speed with Microtoothed Blade, Bowl and Scraper

Front

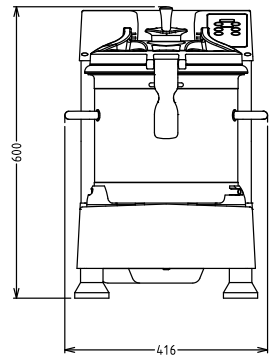

Side

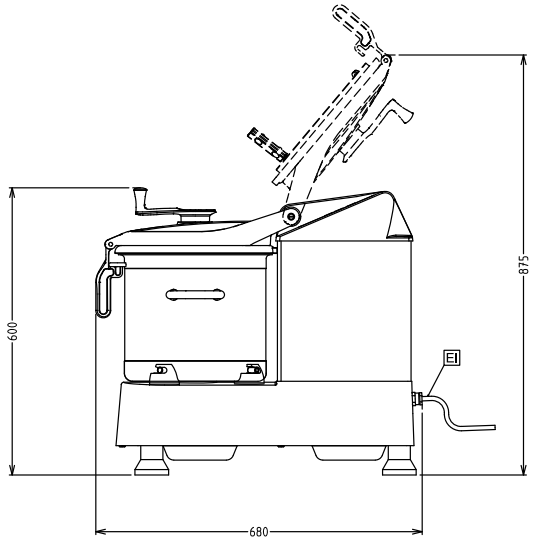

EI = Electrical inlet (power)

Top

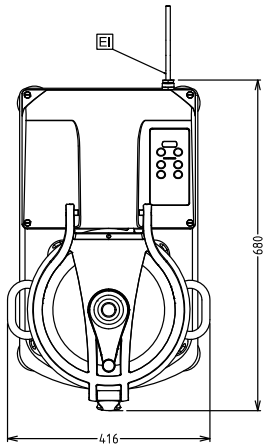

Electric

Supply voltage:	380-480 V/3 ph/50/60 Hz
Electrical power, max:	3 kW
Total Watts:	3 kW

Capacity:

Performance (up to):	8 kg/Cycle
Capacity:	17.5 litres

Key Information:

External dimensions, Width:	416 mm
External dimensions, Depth:	680 mm
External dimensions, Height:	603 mm
Shipping weight:	81 kg

The company reserves the right to make modifications to the products without prior notice. All information correct at time of printing.

2026.11.19